Electrolux PROFESSIONAL

ITEM #

MODEL #

NAME #

SIS #

AIA #

Drop-In
Drop-in remote refrigerated well with refrigerated display, compact (4 GN container capacity)

341124 (D19R4) Drop-in remote refrigerated well with refrigerated display, compact (4 GN container capacity)

Short Form Specification

Item No.

Designed to be positioned in flush installation providing improved cleanability and suitable for modern design installations. Designed to serve: Plates on the shelves and food in GN containers or food on plates/packages or bottles and cans thanks to adjustable bottom well. Suitable for GN 1/1 containers with a maximum height of 200 mm. Food introduced at the correct temperature maintains its core temperature according to Afnor Standards. Automatic defrosting guarantees evaporators clearance and efficient well cooling. Digital control with temperature display with precise adjustment (0,1° C). Fully compliant HACCP digital controls include visible alarms. The unit is composed of two refrigeration systems: a static cooled well on the bottom and evaporator with fan on the top. Bottom well is designed to serve the food in GN containers or bottles and cans. Short sides and the top are in double glazed low emission glass (18 mm thick) to improve insulation avoiding formation of the condensation and reducing energy consumption. The display is illuminated by inside LED light under each glass shelf that emphasizes the cold food colors. The temperature uniformity is guaranteed by fans and an high surface evaporator placed at the top of the unit. The configuration allows a compact foodprint and excellent preservation performances. Plexiglass display case with lift-up doors on both sides to ensure maximum hygiene of the food. Includes 2 adjustable shelves composed of two grids each. The shelves can be adjusted in height to allocate different items. Wells in 304 AISI stainless steel with rounded corners to facilitate cleaning operations. The well is also equipped with a drain hole. High-density expanded polyurethane foam with cyclopenthane guarantees excellent well insulation to reduce energy dispersion. Preadjusted connection to remote cooling unit (not included). Refrigerant type R452a other gases are available on request.

APPROVAL:

Main Features

- Preadjusted connection to remote cooling unit (not included).
- CB and CE certifed by a third party notified body.
- Designed to be positioned in flush installation providing improved cleanability and suitable for modern design installations.
- Suitable for GN 1/1 containers with a maximum height of 200 mm.
- Precise temperature control and setting at 0,1°C .
- As standard the product comes with digitally controlled thermostat which is in line of HACCP norms and provides visual alarm as a warning of the increasing or decreasing temperatures.
- Available drop-in dimensions: 2, 3, 4 GN.
- Food introduced at the correct temperature maintains its core temperature according to Afnor Standards.
- Automatic defrosting guarantees evaporators clearance and efficient well cooling.
- The unit is composed of two refrigeration systems: a static cooled well on the bottom and evaporator with fan on the top.
- Bottom well is designed to serve the food in GN containers or bottles and cans.
- The temperature uniformity is guaranteed by fans and an high surface evaporator placed at the top of the unit.
- The configuration allows a compact footprint and excellent preservation performances.
- Plexiglass display case with lift-up doors on both sides to ensure maximum hygiene of the food.
- Includes 2 adjustable shelves composed of two grids each. The shelves can be adjusted in height to allocate different items.
- The display is illuminated by inside LED light under each shelf that emphasizes the cold food colors.
- Built-in cooling unit version is available.

Construction

- Well bottom is inclined to facilitate water drainage.
- Well in 304 AISI stainless steel with rounded corners to facilitate cleaning operations. The well is also equipped with a drain hole.
- Electronic control with temperature display.
- IPx2 water protection.

Sustainability

- High-density expanded polyurethane foam with cyclopenthane guarantees excellent well insulation to reduce energy dispersion.
- Short sides and the top are in double glazed low emission glass (18 mm thick) to improve insulation avoiding formation of the condensation and reducing energy consumption.

The company reserves the right to make modifications to the products without prior notice. All information correct at time of printing.

2024.10.08

Electrolux PROFESSIONAL

Drop-In
Drop-in remote refrigerated well with refrigerated display, compact (4 GN container capacity)

Rear side

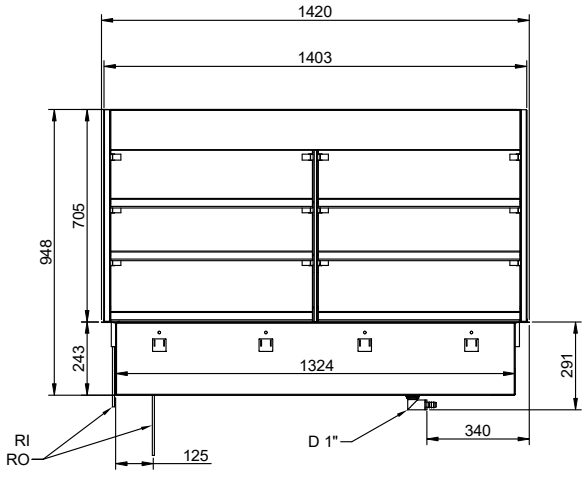

Side

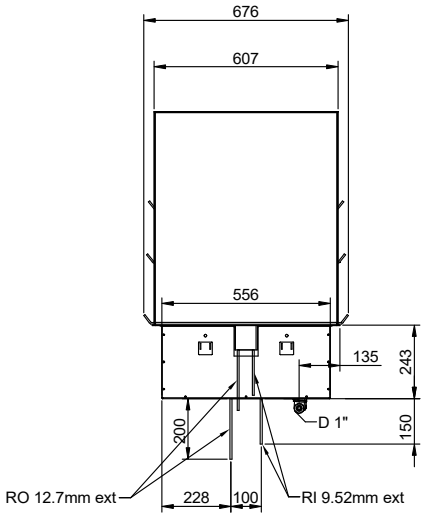

D = Drain
EI = Electrical inlet (power)
RI = Refrigerant Inlet

Top

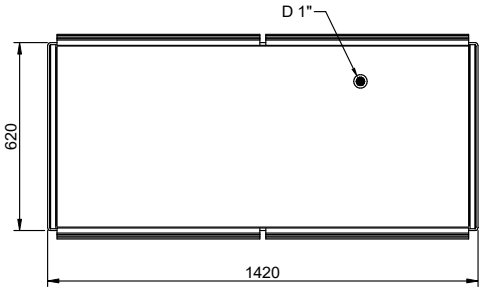

Electric

Supply voltage:	
341124 (D19R4)	220-240 V/1N ph/50 Hz
Electrical power max.:	0.095 kW

Water:

Water drain outlet size:	1"

Key Information:

External dimensions, Width:	1420 mm
External dimensions, Depth:	620 mm
External dimensions, Height:	950 mm
Net weight:	155 kg
Shipping weight:	210 kg
Shipping height:	1500 mm
Shipping width:	700 mm
Shipping depth:	1550 mm
Shipping volume:	1.63 m³
Set temperature:	+4 / +8 °C

Refrigeration Data

Refrigerant type:	R452A
Connection pipes (remote) - outlet:	12.7 mm
Connection pipes (remote) - inlet:	9.52 mm

Sustainability

Noise level:	0 dBA

The company reserves the right to make modifications to the products without prior notice. All information correct at time of printing.

2024.10.08

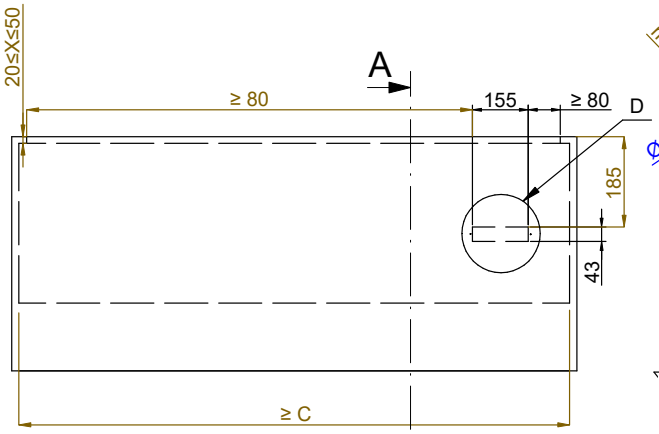

Front view
Scala: 1:10

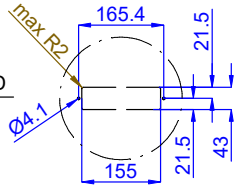

Dettaglio D
Scala 1:7

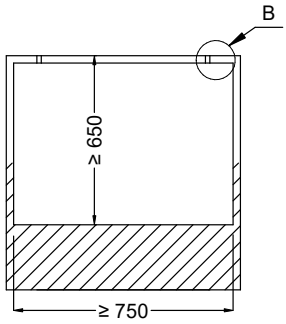

Section Cut A-A
Scala: 1:10

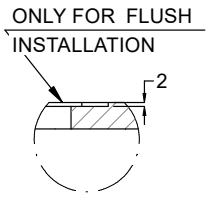

Dettaglio B
Scala 1:2

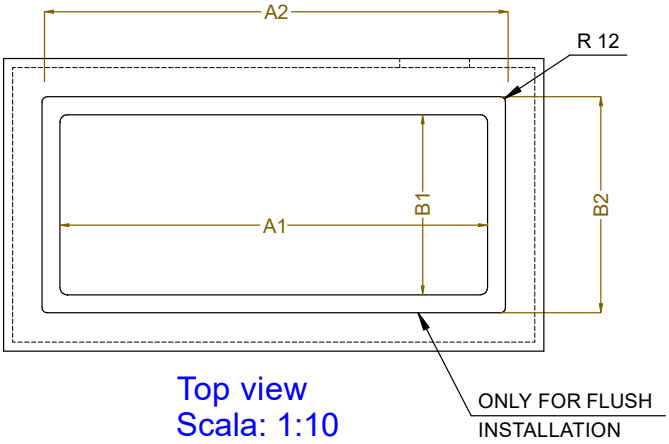

Top view
Scala: 1:10

CAPACITY	CUTOUT		LOWERING FOR FLUSH INSTALLATION		C
	A1	B1	A2	B2	
2GN	700	580	774	624	880
3GN	1030		1104		1200
4GN	1350		1424		1530

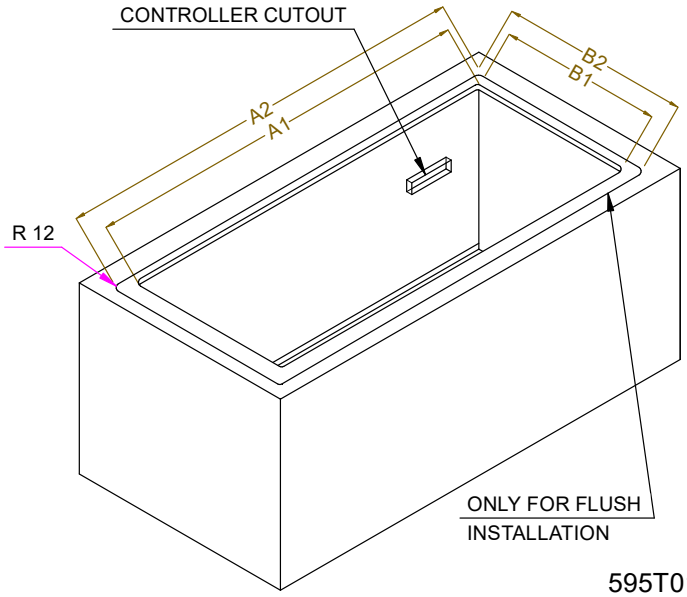

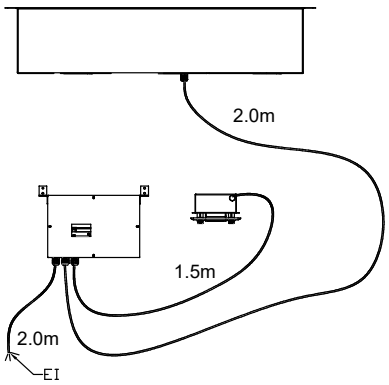

595T01Y00 - COLD COMPACT DISPLAY REM.

The company reserves the right to make modifications to the products without prior notice. All information correct at time of printing.